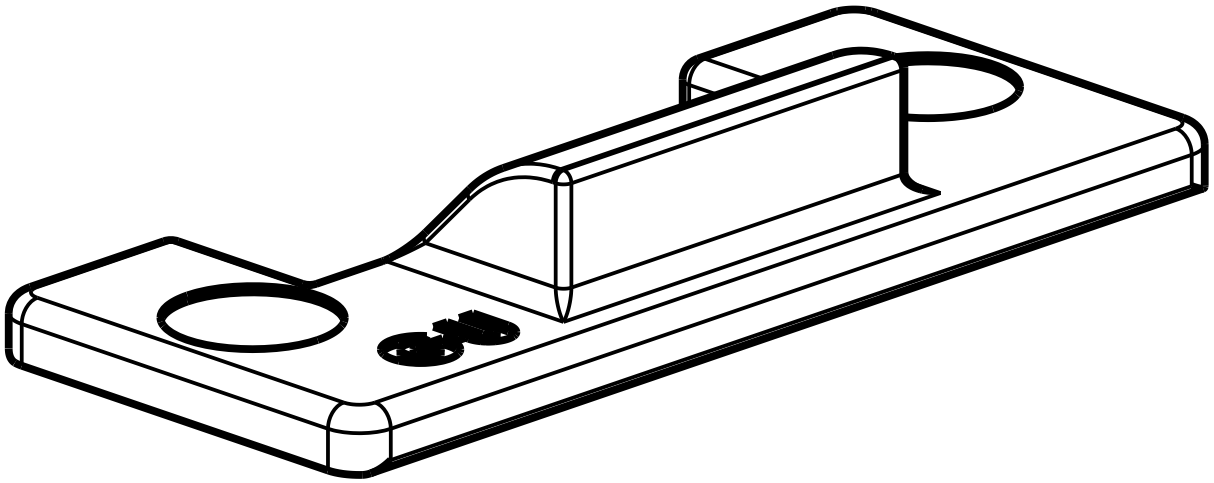

# 9-41850-00-0

Scale
1:1

| | | |
|---|---|---|
| Draft | 07.05.2021 | Dr |